紫光展锐
UNISOC

Unisoc Confidential For longcheer

Audio Introduce

UNISOC Project

WWW.UNISOC.COM
紫 光 展 锐 科 技

数字世界的生态承载者

Catalogue

Unisoc Confidential For longcheer

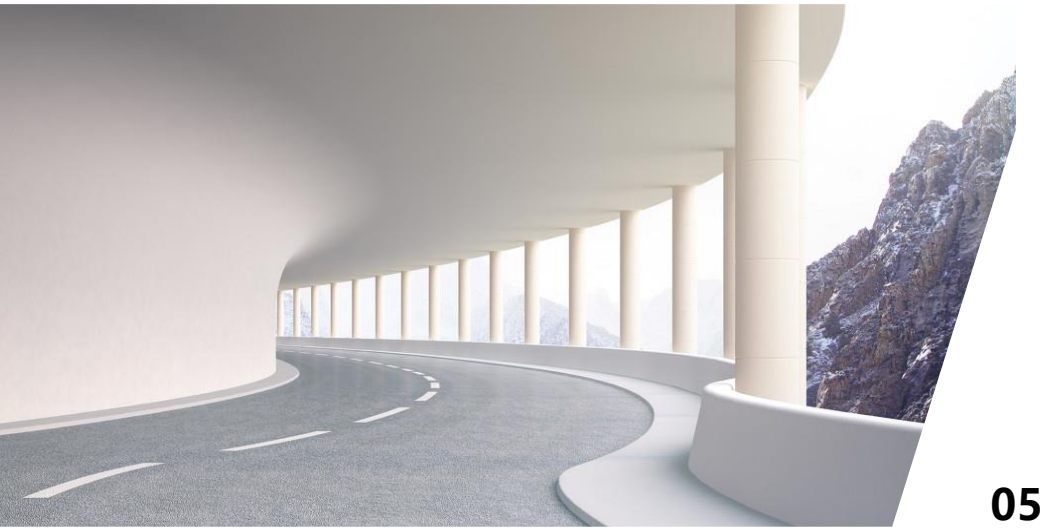

01 Audio Architecture

02 Audio Multimedia Architecture

03 Audio Voice Architecture

04 Audio Tool &Para &Tuning

05 Audio Voice CVS

Unisoc Confidential For longcheer

PART 01

Audio Architecture

Audio Architecture - System

Unisoc Confidential For longcheer

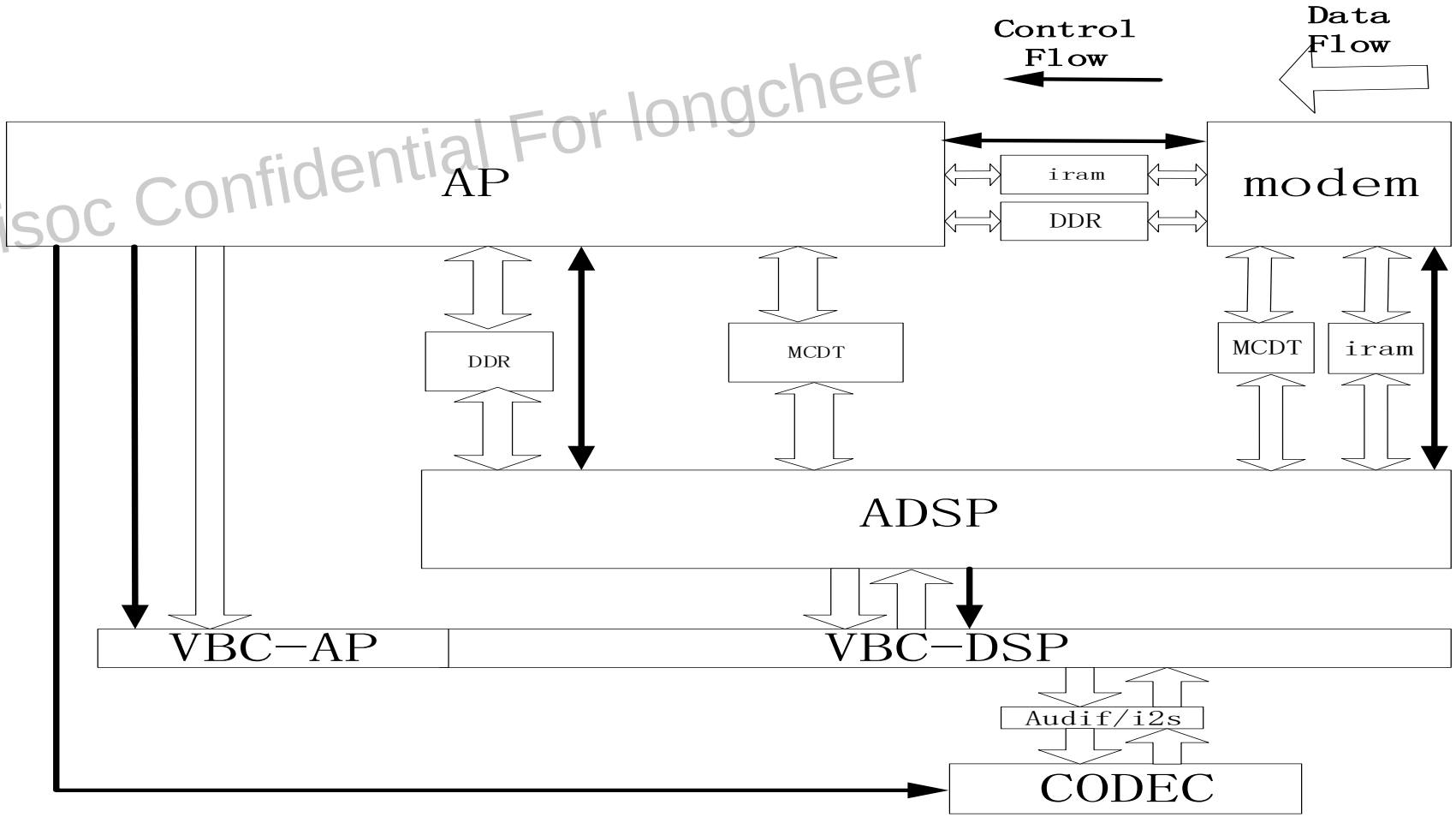

1 ADSP: CEVA Tecklite420 DSP Core is used as audio processor, max clock frequency: 614.4MHz.
2 Unless otherwise specified, this paper is applicable to T618, T606 SOC by default.

Audio Architecture - software

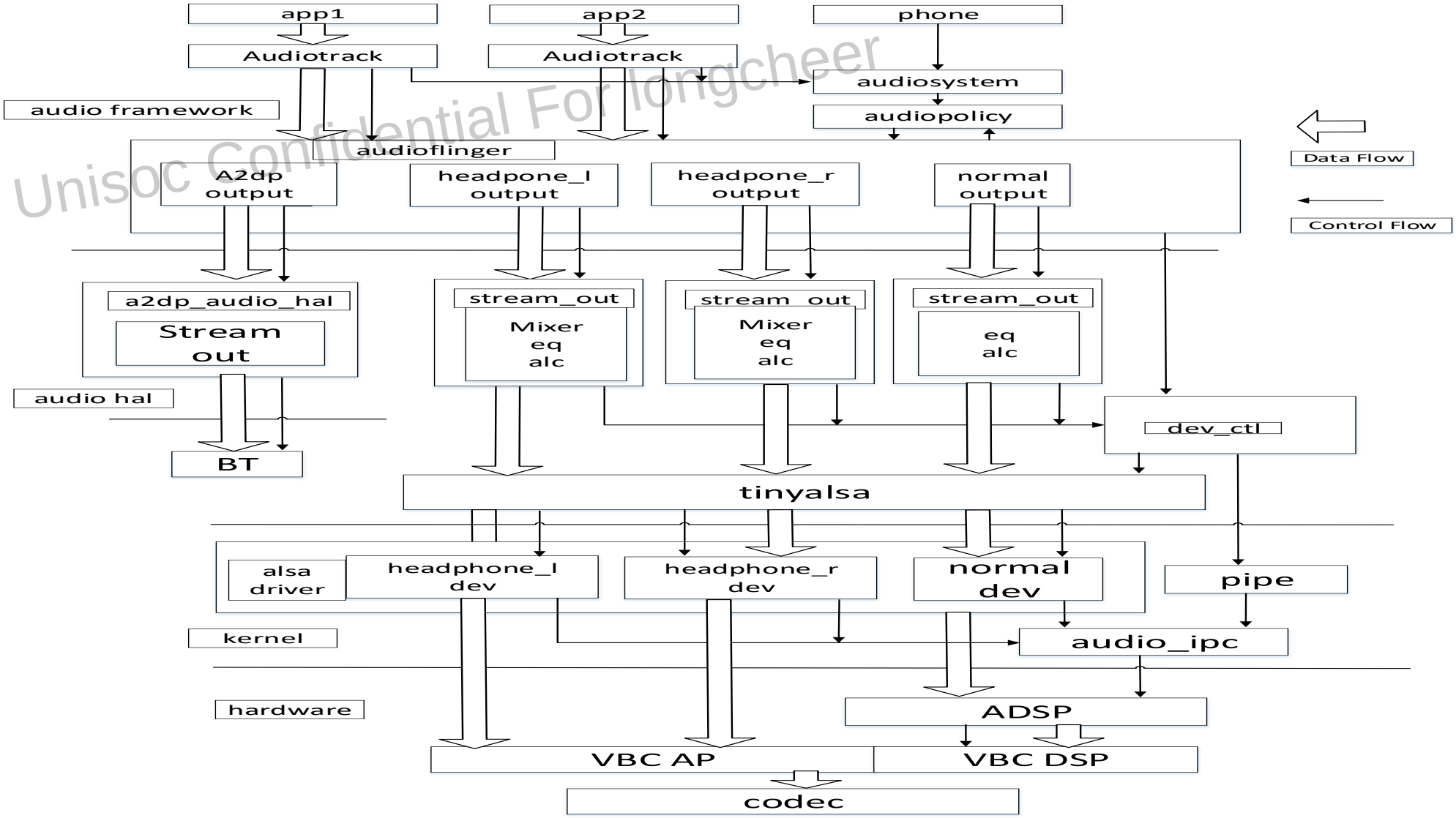

Unisoc Confidential For longcheer

Audio Architecture - hardware

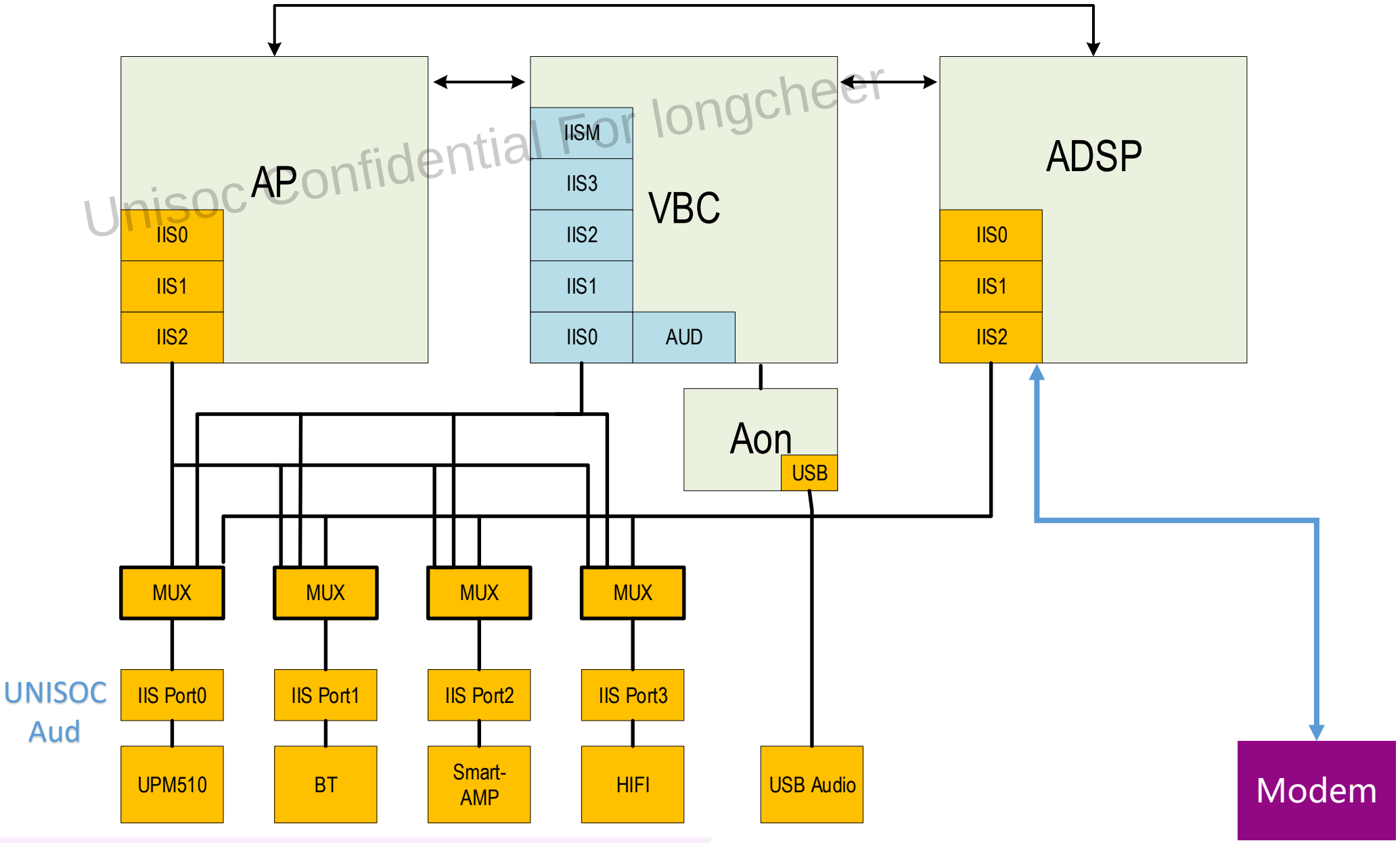

Unisoc Confidential For longcheer

Audio Architecture - VBC

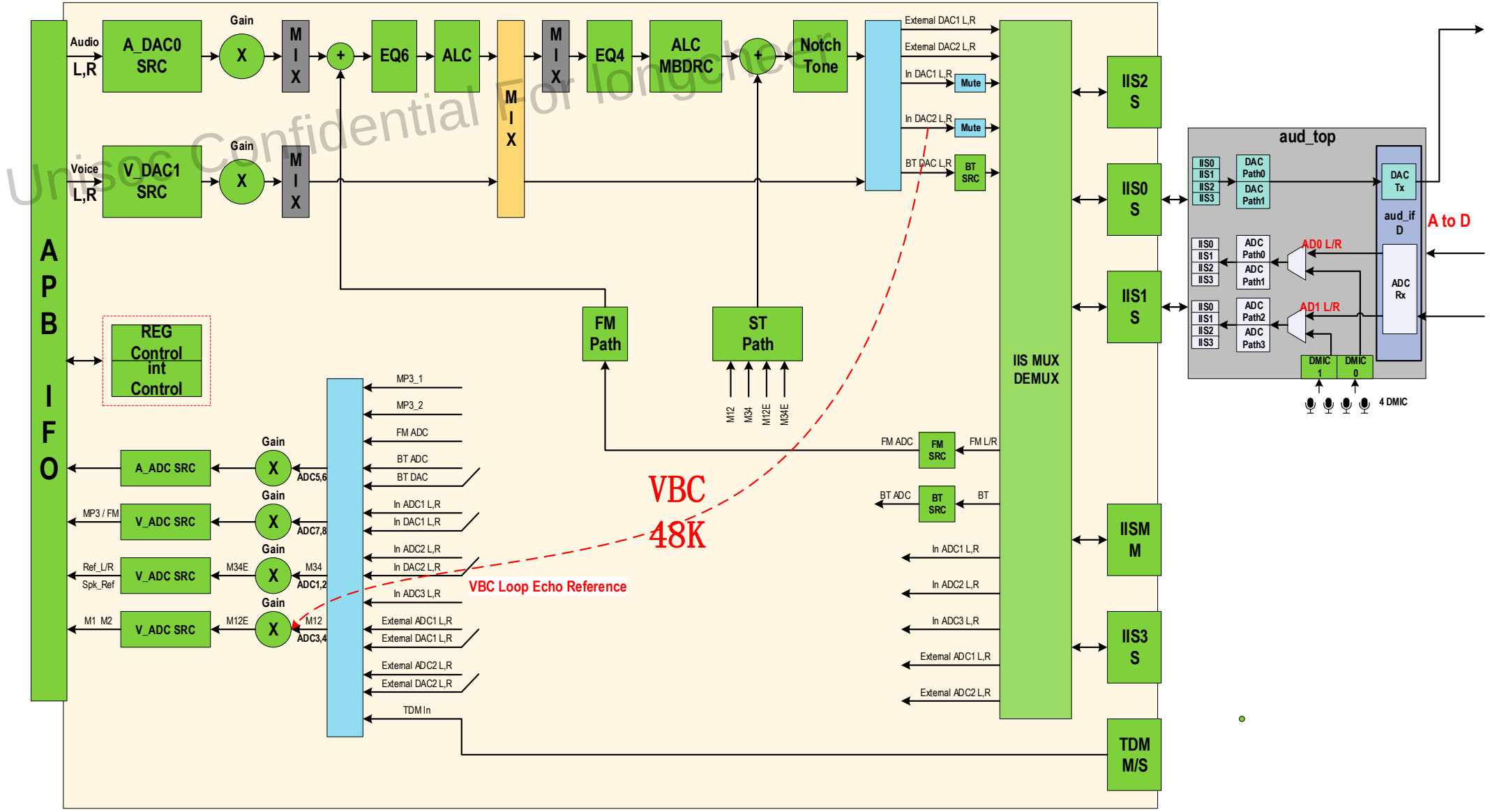

Unisoc Confidential For longcheer

Audio Architecture- Codec

- Stereo Audio Rx Path(2 ADC)
  - SNR:94dB(A)
  - THD:-90dB
  - PSRR:70dB@1KHz

- Stereo Audio Tx Path(3 DAC)
  - Headphone driver
    - Gain:-30dB to 3dB(3dB Step)
    - Power:31.25mW@32ohm
    - SNR:110dB
    - THD+N:87dB
    - PSRR:80dB
    - X-Talk:90dB
    - Click-Pop:60uV
  - Receiver driver
    - Gain:-30dB to 3dB(3dB Step)
    - Power:125mW@32ohm
    - SNR:114dB
    - THD+N:90dB
    - PSRR:80dB
  - Speaker driver
    - Support Class D & Class AB
    - Support Boost 5.5V ; 1.5W@8ohm
    - SNR:103dB @ 1.0W
    - THD+N:90dB
    - PSRR:80dB

Unisoc Confidential For longcheer

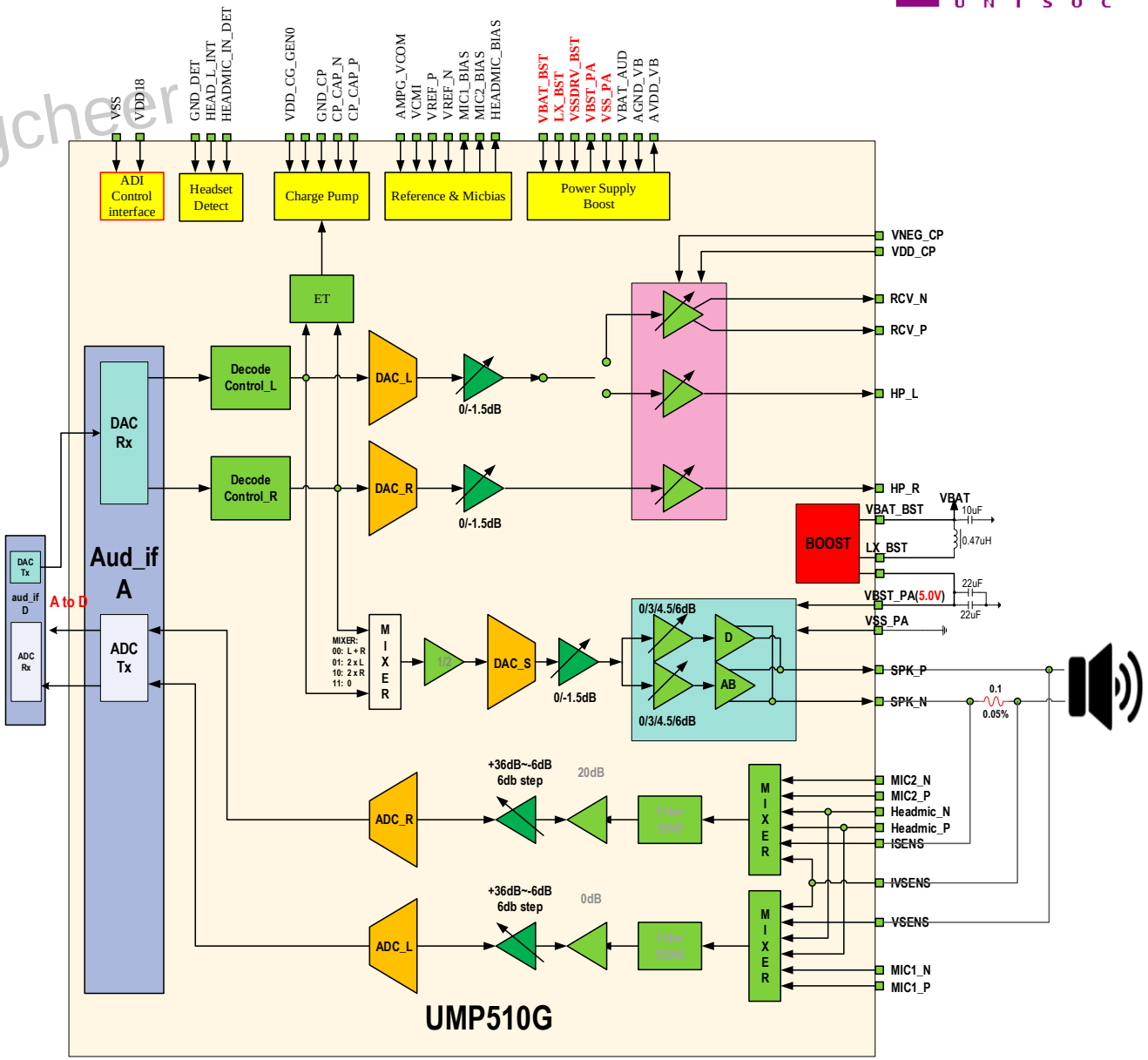

Unisoc Confidential For longcheer

PART 02

Audio Multimedia Architecture

Audio Multimedia Architecture - Playback

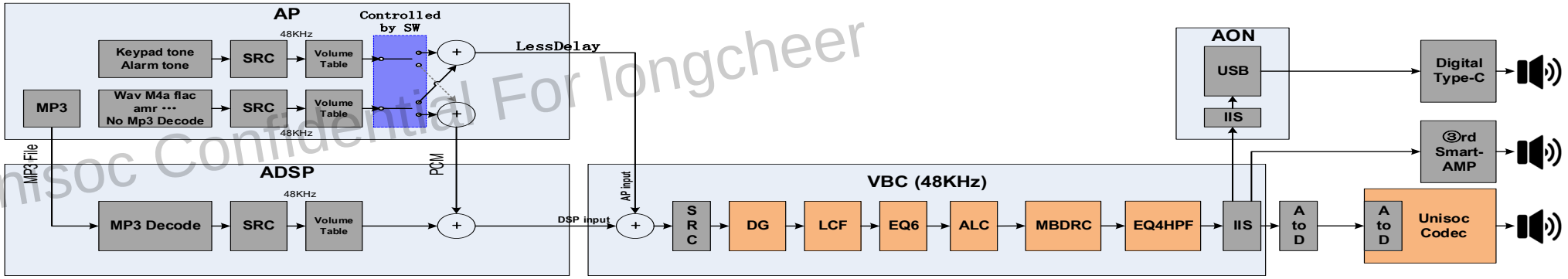

Playback Without Smart-AMP Function

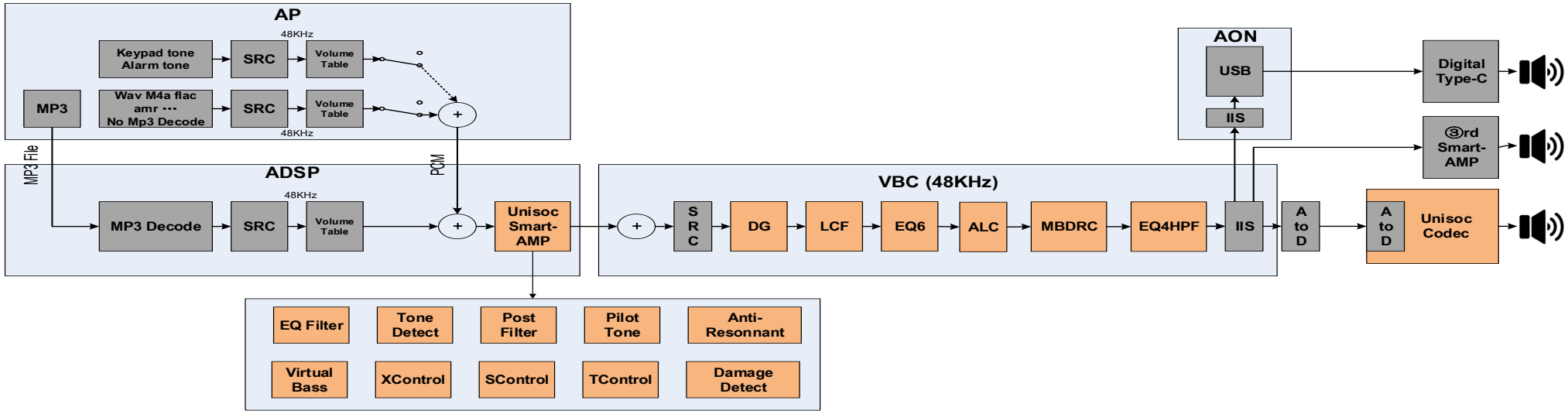

Playback With Smart-AMP Function

Unisoc Confidential For longcheer

Audio Multimedia Architecture - BT Playback

Unisoc Confidential For longcheer

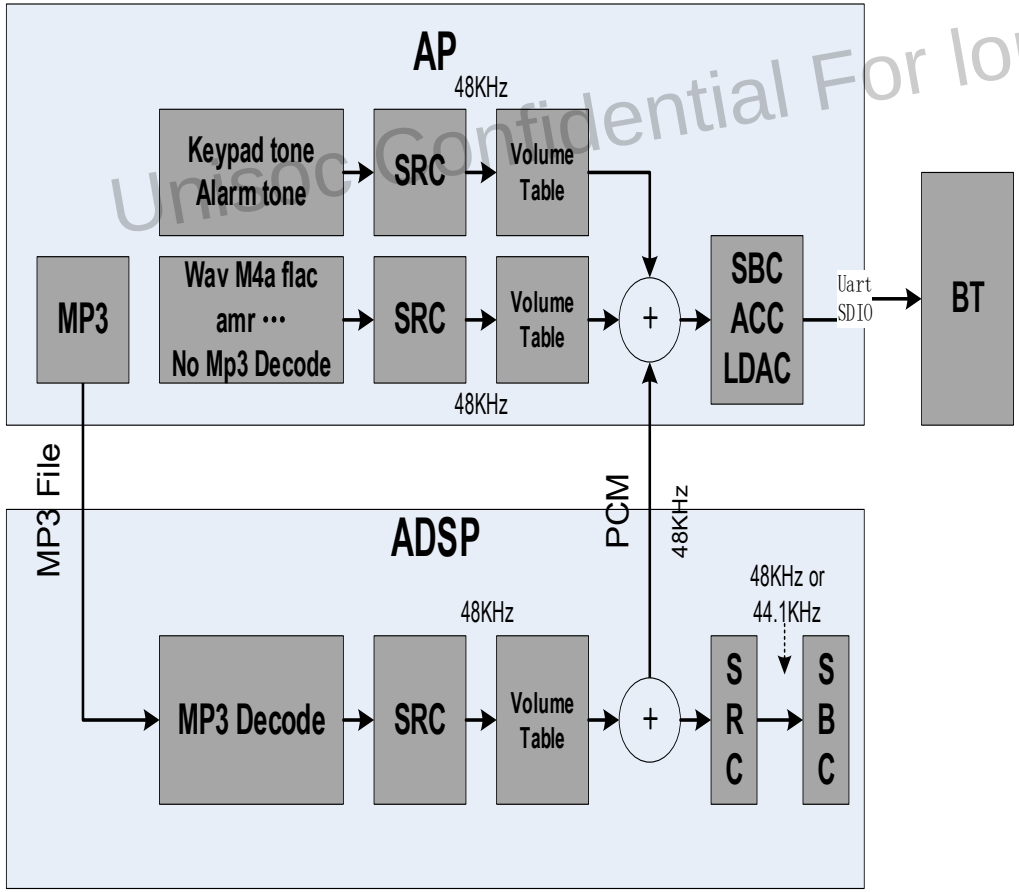

BT Playback(Non-offload mode)

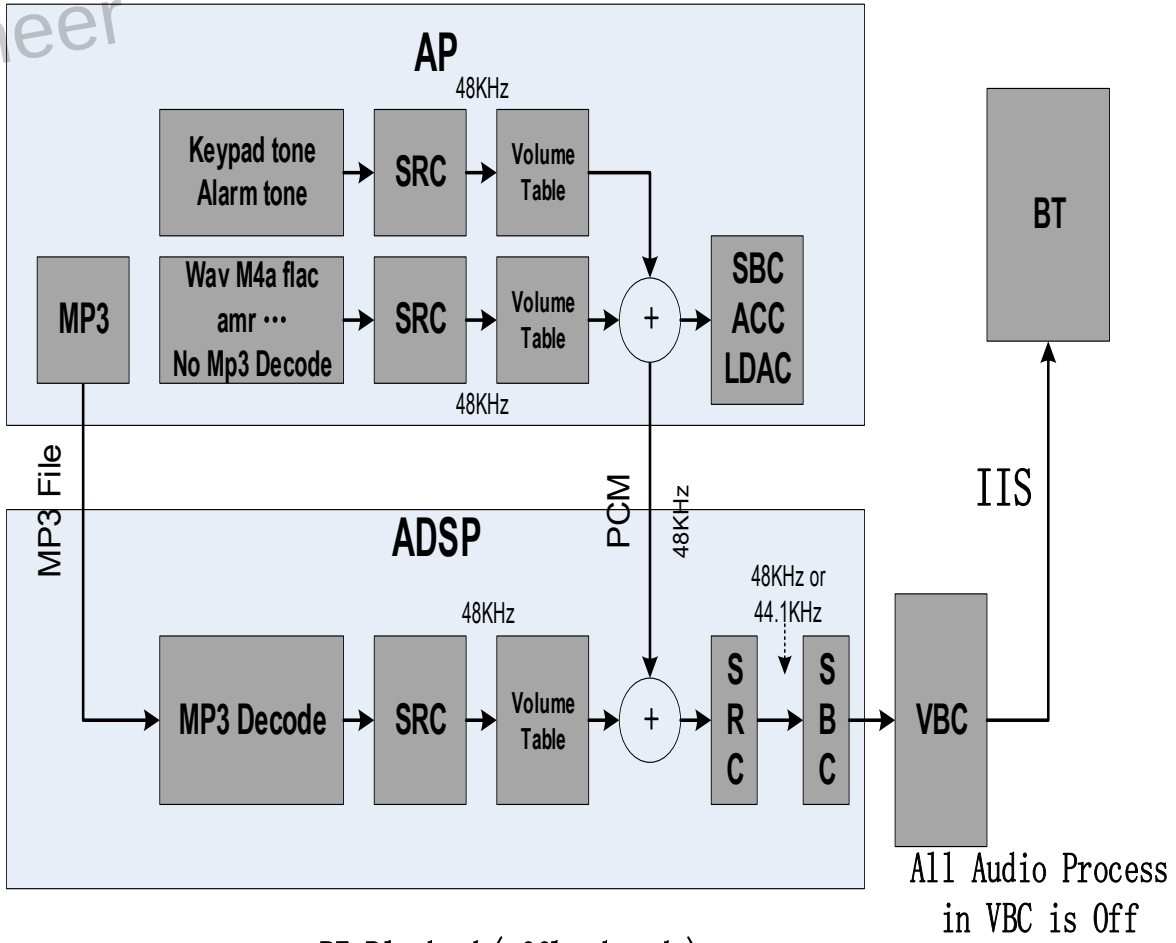

BT Playback(offload mode)

Audio Multimedia Architecture - Record

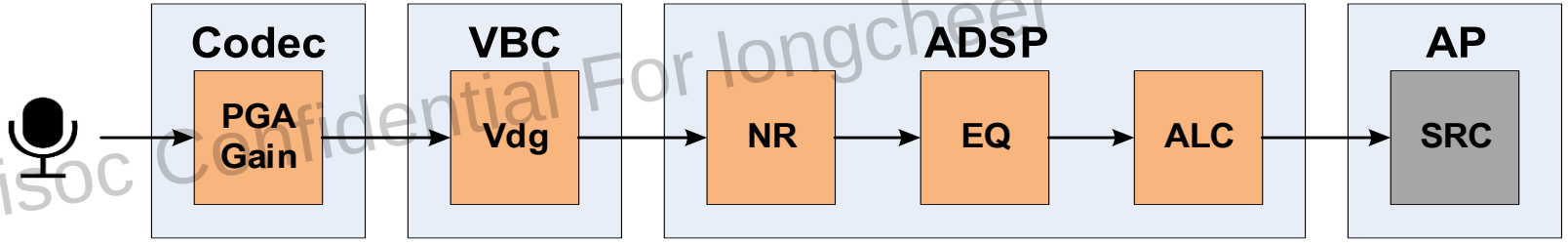

Normal Record & Unprocess Record

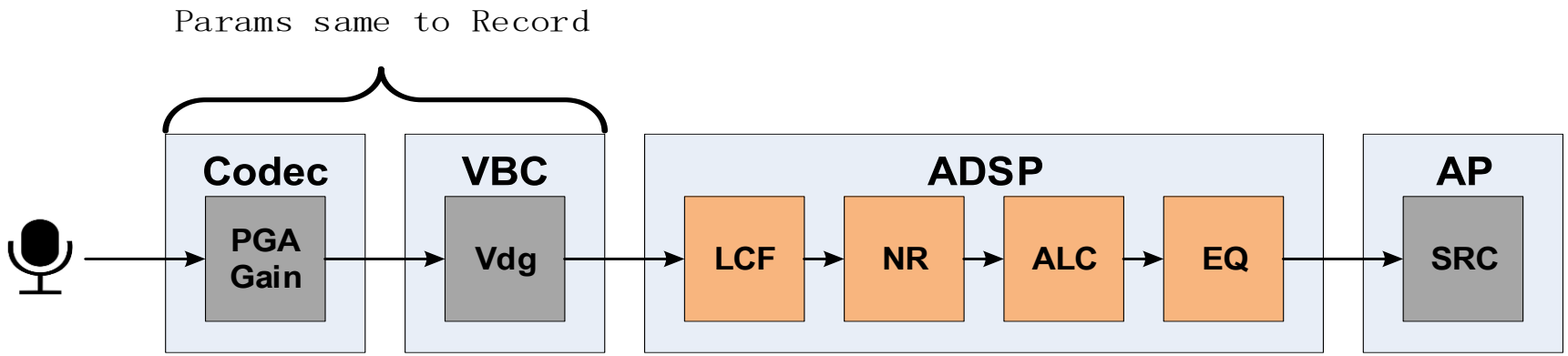

Voice Recognition

Unisoc Confidential For longcheer

Audio Multimedia Architecture - FM

Unisoc Confidential For longcheer

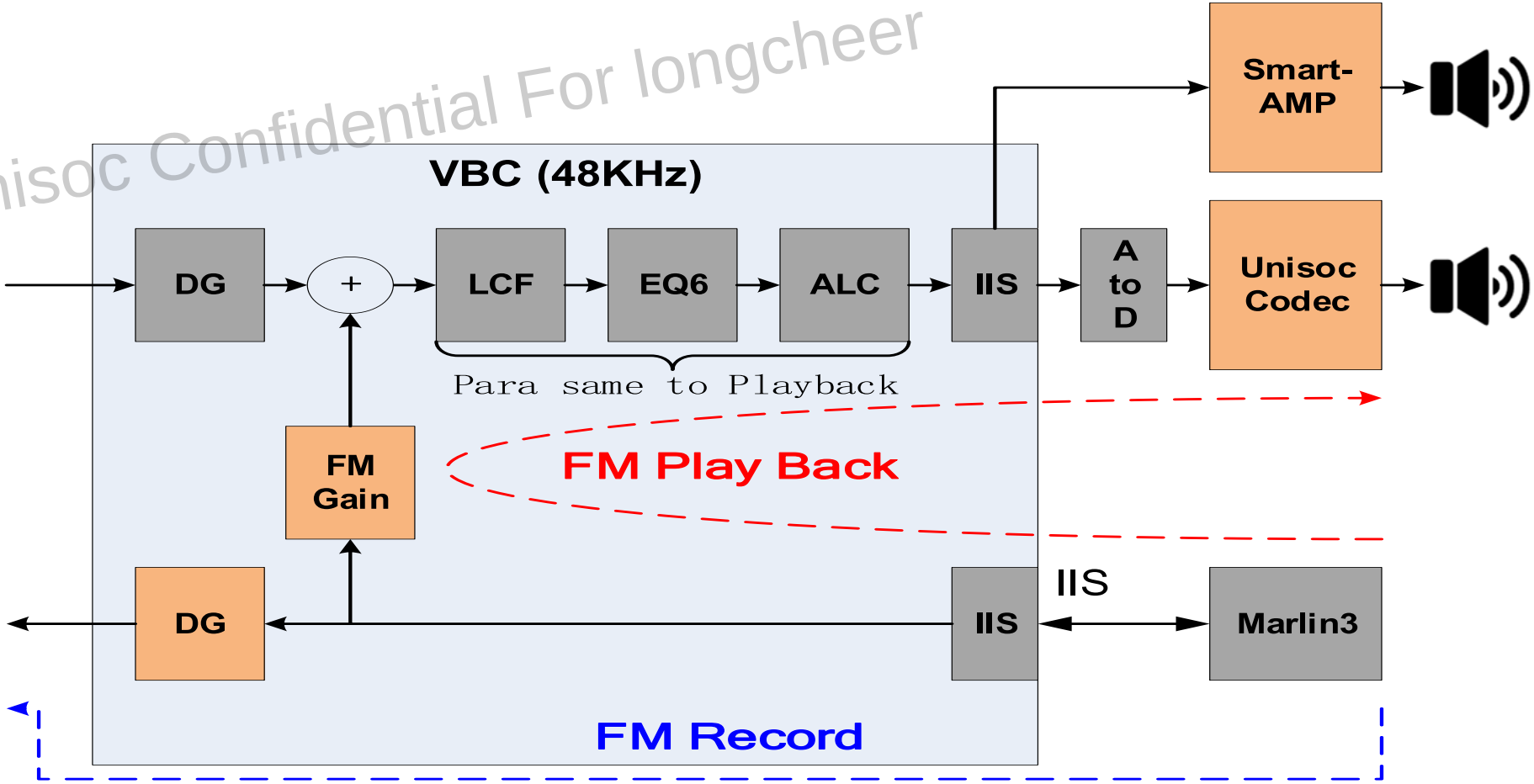

Unisoc Confidential For longcheer

PART 03

Audio Voice Architecture

Audio Voice Architecture

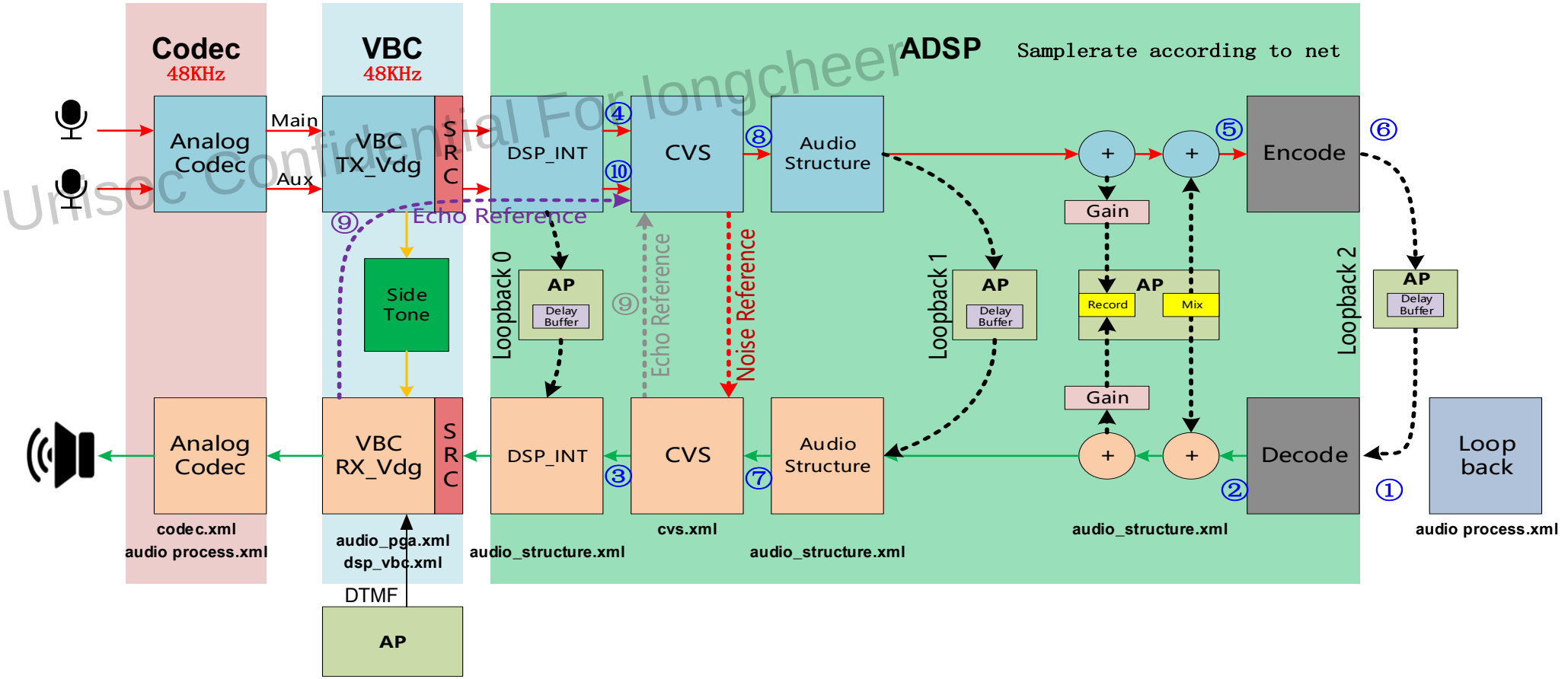

Unisoc Confidential For longcheer

1 Loopback Mode: 0 , 1 ;
1)0:Loop during AP;
2)1:Loop not during AP;

2 Loopback Type: 0 , 1 , 2;
1)0:Loop after DSP interrupt ;
2)1:Loop after Arithmetic;
3)2: Loop after encoding

① ② --------- ⑩

Support to get the pcm data of the positons of 1/2/.../10 points.

Audio Voice Architecture - Codec & Algorithm

紫光展锐 UNISOC

Unisoc Confidential For longcheer

voice codec			
CODEC	Type	Bit rate (Kbits/s)	Notes
FR	SW	13	
EFR	SW	12.2	
HR	SW	5.6	
AMR-NB	SW	4.75,5.15,5.9,6.7,7.4, 7.95,10.2,12.2	
AMR-WB	SW	6.6,8.85,12.65,14.25,15.85, 18.25,19.85,23.05,23.85	Not supported in GSM mode
EVRC-A	SW	9.6,4.8,1.2	
EVRC-B	SW	9.6,4.8,2.4,1.2	
EVS	SW	5.9, 7.2, 8.0, 9.6, 13.2, 16.4, 24.4, 32.0, 48.0, 64.0, 96.0 or 128.0	Only support 8K/16K/32K Sample rate , 48K not supported
AMR-IO	SW	6.6,8.85,12.65,14.25,15.85, 18.25,19.85,23.05,23.85	

voice processing algorithm			
algorithm	Type	Sample rate(Hz)	Notes
audio4.5	SW	8K,16K,32K	DSP
CVS	SW	8K,16K,32K	
Smart PA	SW	8K,16K,32K	

Unisoc Confidential For longcheer

PART 04

Audio Tool &Para &Tuning

Audio Tool Introduction

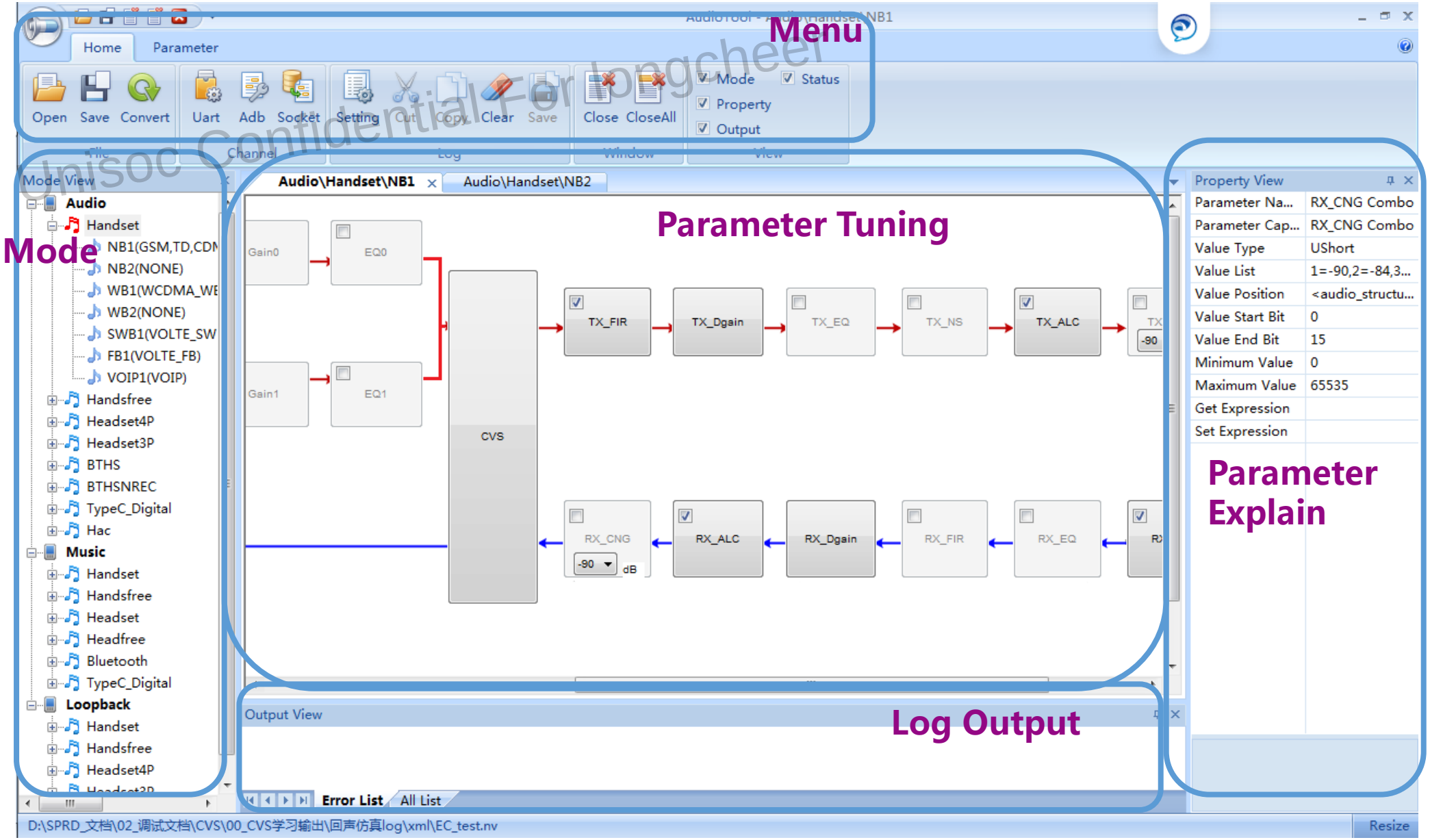

Unisoc Confidential For longcheer

Audio Parameters

紫光展锐 UNISOC

Number of xml files: 8

Unisoc Confidential For longcheer

名称

- audio_pga.xml
- audio_process.xml
- audio_structure.xml
- audioparam_config.xml
- codec.xml
- cvs.xml
- dsp_smartamp.xml
- dsp_vbc.xml

o_process.xml | dsp_vbc.xml

```
<?xml version="1.0" encoding=
<dsp_vbc set="DSP VBC Profile
    <Audio>
        <Handset>
        <Handsfree>
        <Headset4P>
        <Headset3P>
        <BTHS>
        <BTHSNREC>
        <TypeC_Digital>
        <Hac>
    </Audio>
    <Music>
        <Headset>
        <Handsfree>
        <Headfree>
        <Handset>
        <TypeC_Digital>
    </Music>
    <Loopback>
        <Handset>
        <Handsfree>
        <Headset4P>
        <Headset3P>
    </Loopback>
</dsp_vbc>
```

corresponding expand

audio_process.xml | dsp_vbc.xml | audio_structure.xml | audioparam_config.xml | codec.xml | cvs.xml | dsp_s

ID, unique — If visible in tool — Value of register

```
1   <?xml version="1.0" encoding="UTF-8" standalone="no" ?>
2   <dsp_vbc set="DSP VBC Profile Select" upload="DSP VBC Profile Update" time="2020-03-09 09:56:50" num_mod
3       <Audio>
4           <Handset>
5               <NB1 mode="0">
6                   <reserve0 offset="0" bits="12288" t="u12288" id="0x0" visible="false" val="0x0" />
7                   <st_control_0 id="0x600" t="u32">
29                  <st_control_1 id="0x604" t="u32">
41                  <st_drc_rise id="0x608" t="u32" offset="0" bits="32" visible="true" val="0x2000" />
42                  <st_drc_fall id="0x60c" t="u32" offset="0" bits="32" visible="true" val="0x04fd" />
43                  <st_drc_limit id="0x610" t="u32" offset="0" bits="32" visible="true" val="0x00" />
```

o_pga.xml | audio_process.xml | audio_structure.xml | audioparam_config.xml | codec.xml | cvs.xml | dsp_smartamp.xml | dsp_vbc.xml

Net — Path — Mode — Path

```
<audioparam_config>
    <AudioTester ChipName="sharkl5" FmType="Digital" CodeType="2730" SocketBufferSize="0xffff" DiagBufferSize="0xfff0" etc_path="/vendor/etc/aud
        <common>
            <audioparam name="Audio\Handset\NB1" Path="Audio\RCV" Usecase="GSM,TD,CDMA2000,WCDMA_NB,VOLTE_NB,VOWIFI_NB" OutDevice="Earpiece" />
            <audioparam name="Audio\Handset\NB2" Path="Audio\RCV" Usecase="NONE" OutDevice="Earpiece" />
            <audioparam name="Audio\Handset\WB1" Path="Audio\RCV" Usecase="WCDMA_WB,VOLTE_WB,VOWIFI_WB" OutDevice="Earpiece" />
```

Get and Analyze Audio log – Voice

Save DSP Log to UE's Memory and reply it in PC by logel.exe Tool：

1. In UE Part: Under the engineering mode (Debug Mode), enter the key string "*#*#83781#*#*"
2. In UE Part: DEBUG&LOG->YLog->Settings->"Audio Scene"
3. In UE Part: "Debug Setting & Tools": Modem To PC –> Off
4. In UE Part: Start to Call and Stop Calling
5. pull files in UE to PC: /storage/emulated/0/ylog/audio
6. In PC Part: Run logel.exe, File –Replay –step 5 log file, and wait replay to be finished.
7. In PC Part: Tool -> audio -> audio DSP transfer
8. In PC Part: Press Transfer

Unisoc Confidential For longcheer

Step 3

step7

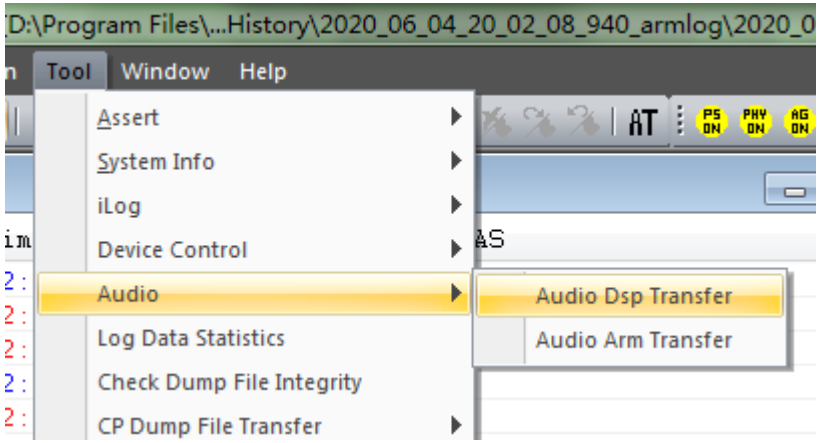

Step 6,replay finished

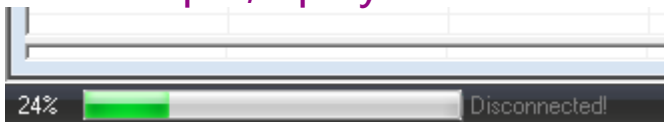

Get and Analyze Audio log – Voice

Save DSP Log to PC directly by logel.exe tool：

1. In UE Part: Under the engineering mode (Debug Mode), enter the key string “*#*#83781#*#*”
2. In UE Part: DEBUG&LOG->YLog->Settings->“Audio Scene”
3. In UE Part: "Debug Setting & Tools": Modem To PC –> On
4. In PC: Run logel.exe->capture setting -> Auto Identify Port is selected.
5. Press “capture now”, then start to call
6. then stop capture
7. Tool -> audio -> audio DSP transfer
8. Press Transfer

Unisoc Confidential For longcheer

Step 3

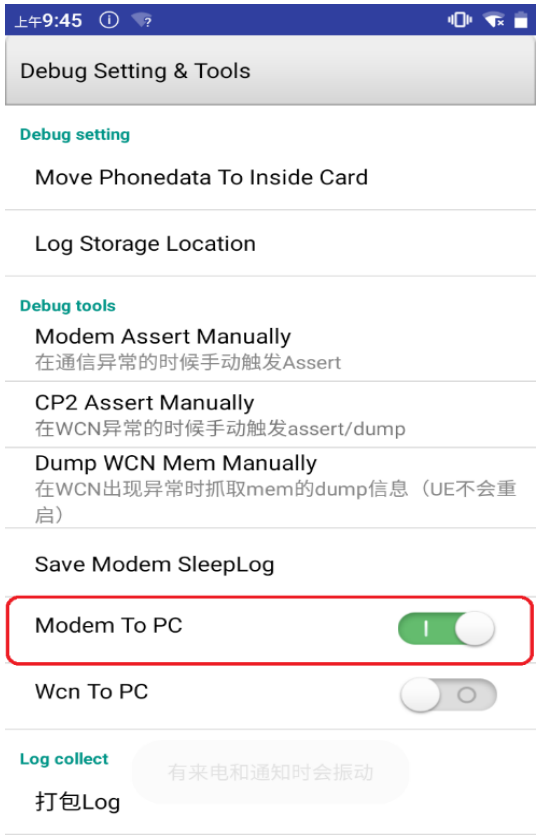

Step 7

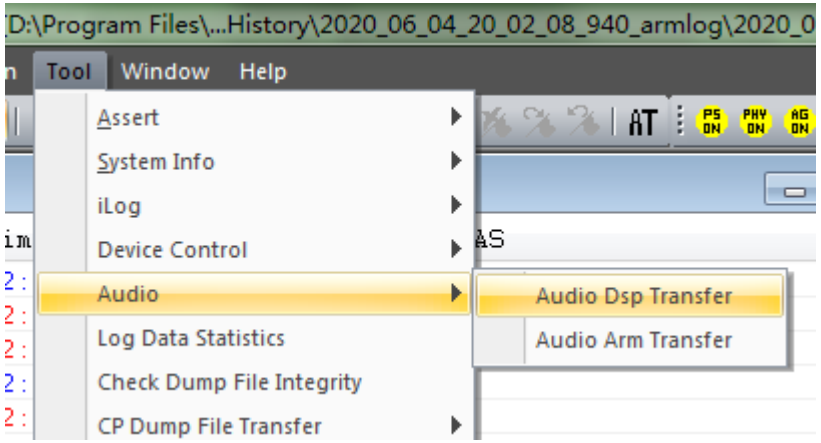

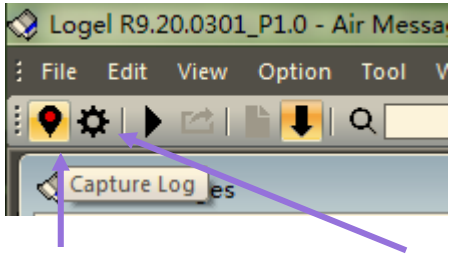

Step 5 Step 4

Get and Analyze Audio log - Music

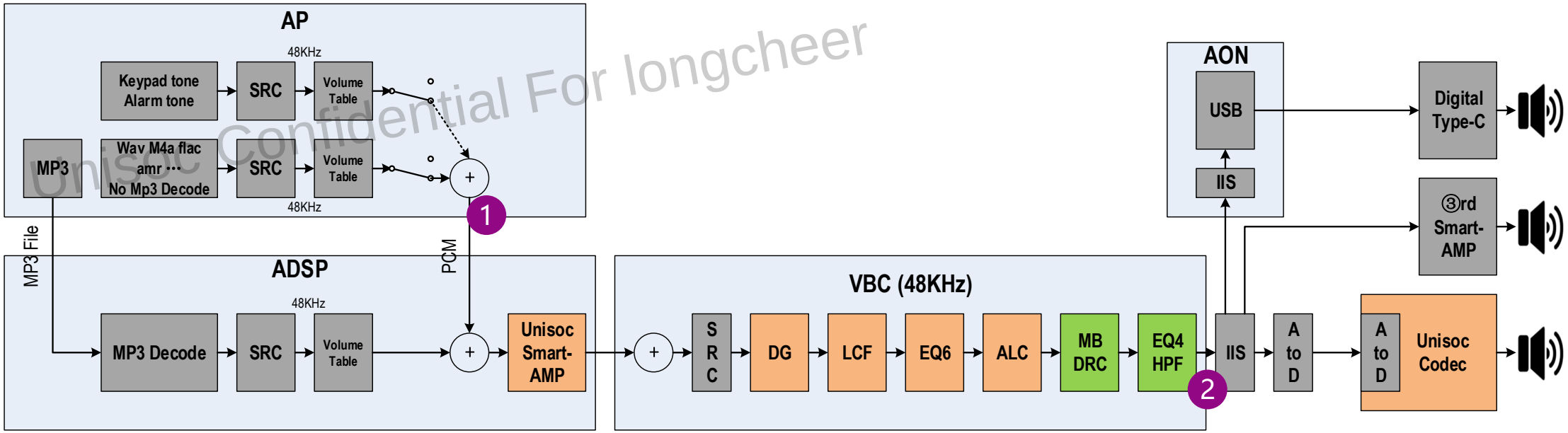

Unisoc Confidential For longcheer

1: dump pcm data from AP to DSP

start： echo "dumpvbc=1" > /data/vendor/local/media/mmi.audio.ctrl

stop： echo "dumpvbc=0" > /data/vendor/local/media/mmi.audio.ctrl

2: dump pcm data out of VBC

start ： echo "vbc_pcm_dump=vbc_dac0;" > /data/vendor/local/media/mmi.audio.ctrl

stop ： echo "vbc_pcm_dump=disable;" > /data/vendor/local/media/mmi.audio.ctrl

Output file to PC: /data/vendor/local/media/*.pcm, open it by audition tool.

数字世界的生态承载者

Get and Analyze Audio log -Record

Unisoc Confidential For longcheer

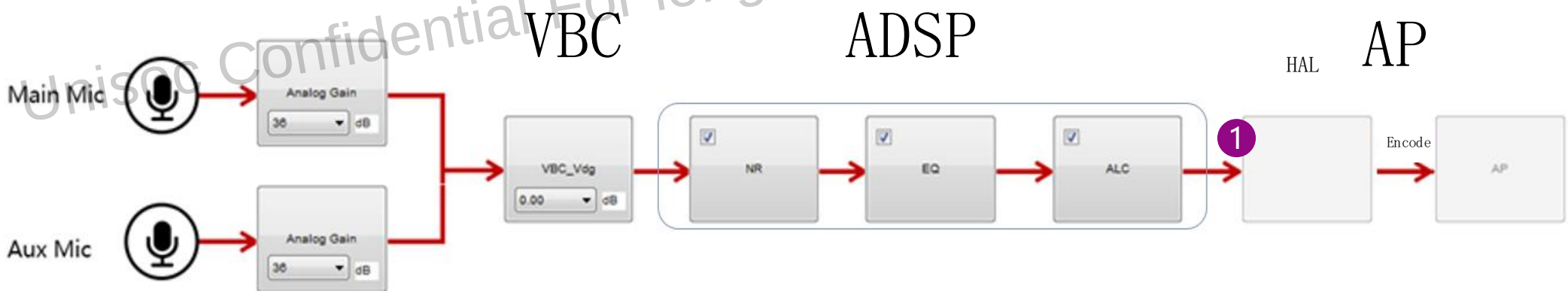

1： pcm data from ADSP to HAL of AP

start： echo "dumpvbc=1" > /data/vendor/local/media/mmi.audio.ctrl

stop： echo "dumpvbc=0" > /data/vendor/local/media/mmi.audio.ctrl

Output file to PC: /data/vendor/local/media/*.pcm, open it by audition tool.

数字世界的生态承载者

Unisoc Confidential For longcheer

PART 05

Audio Voice CVS

CVS Introduction

- CVS, Clear Voice Suite, includes a serious of algorithm of voice process for UE
- CVS supports the voice process of uplink and downlink path:
  - EC: Echo Canceller NS: Noise Suppress、
  - HF: High Filter, EQ Filter, ALC: Automatic Level Control
- CVS can be used in ARM and DSP，supported in NB&WB&SWB&FWB mode.
- CVS supports adjustable parameters and supports up to 2 MICs at present.

Unisoc Confidential For longcheer

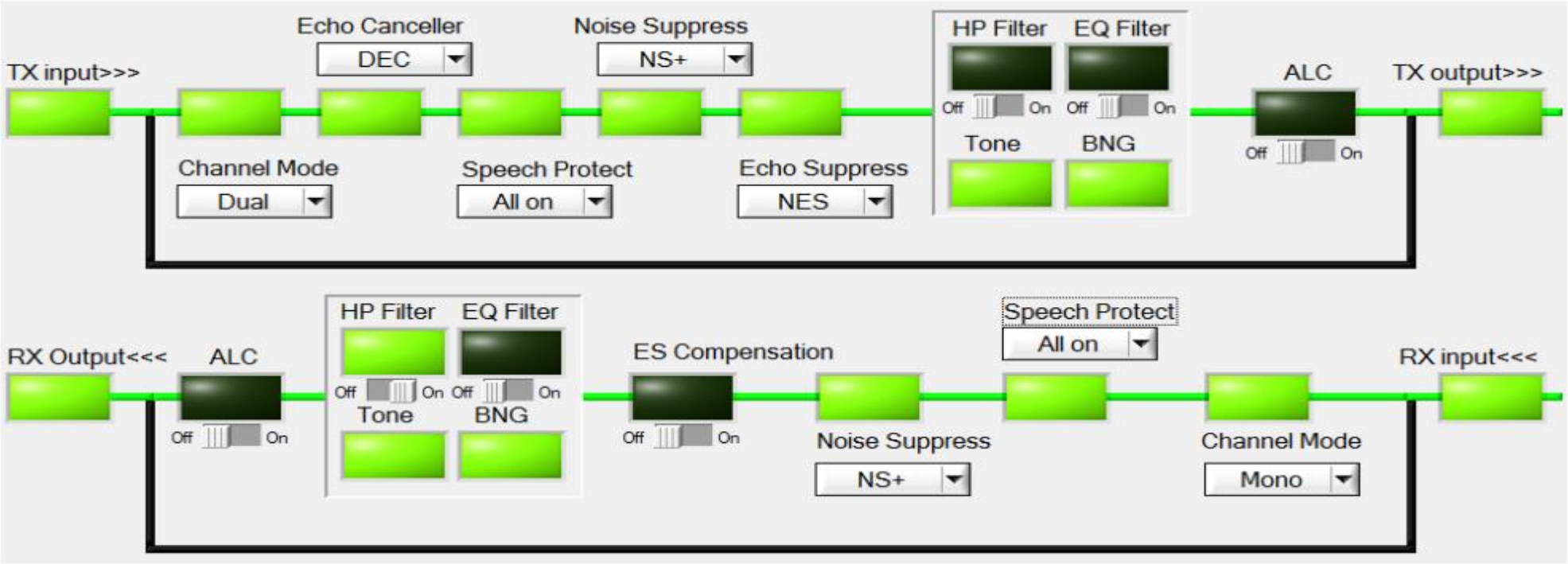

Effect of hand-held call - single mic echo canceller

- The frequency domain adaptive echo cancellation (AEC) and echo suppression algorithm are used to eliminate the echo and keep the two speakers intact.

Unisoc For longcheer

Without EC

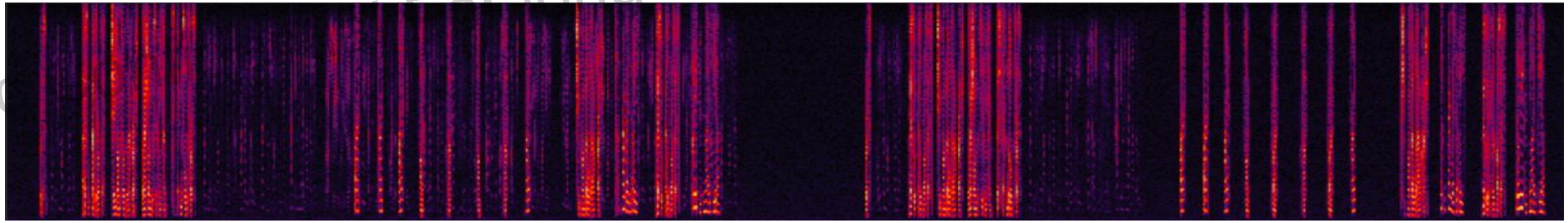

With EC

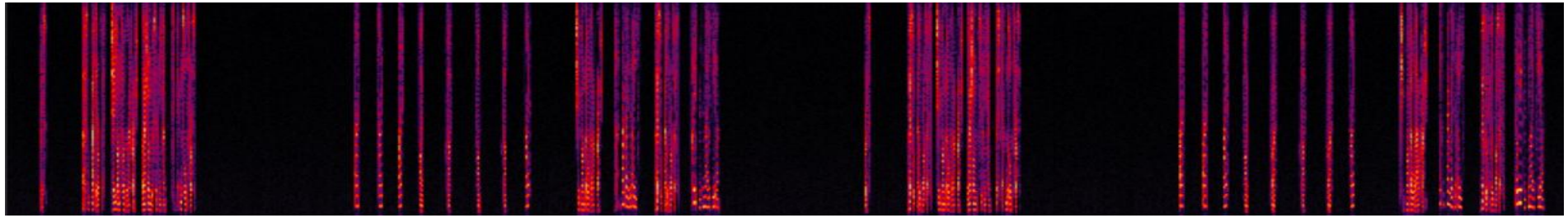

- Optimal objective value
  - Echo loss > 60dB
  - aHSdt < 2dB (Type1)
  - DT Class A1 = 100%

Note:

The optimal objective value in this page and the followed ones is obtained from the internal reference prototype test of UNISOC sc9863a and the explanation will not be repeated.

Effect of hand-held call - dual mics echo canceller

- Double MIC is used to remove echo, which mainly includes double channel linear echo cancellation, crosstalk cancellation and echo suppression. The echo cancellation is clean and the double speakers are well preserved.

Unisoc Confidential For longcheer

Mic1 Without EC

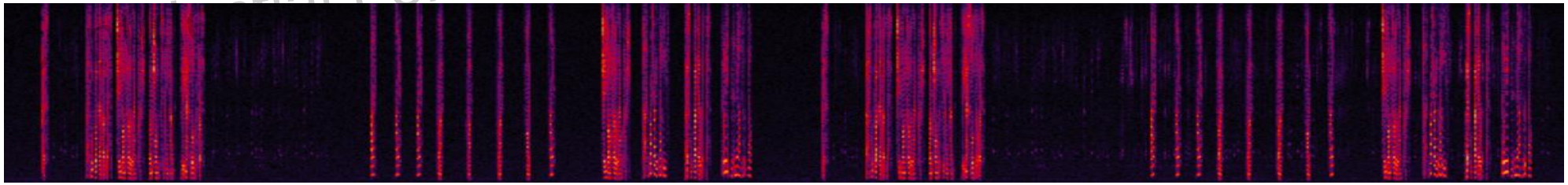

Mic2 Without EC

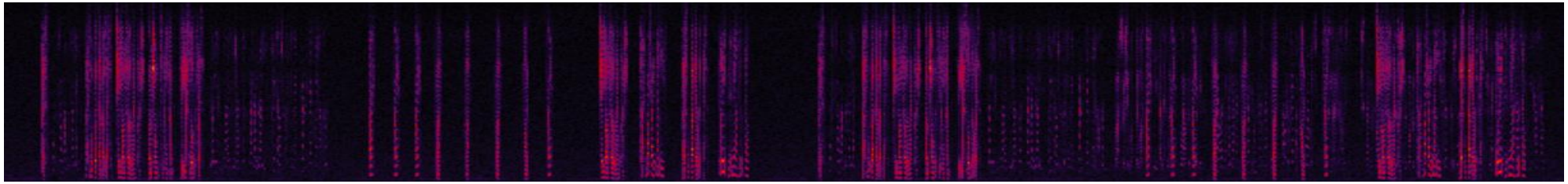

With EC

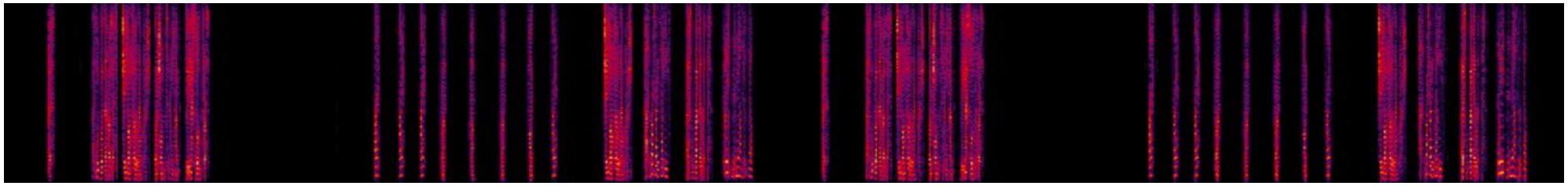

- Optimal objective value
  - Echo loss > 70dB
  - aHSdt < 2dB (Type1)
  - DT Class A1 = 100%

Behavior	Type1	Type2a	Type2b	Type2c	Type3
aHSdt[dB]	≤ 3	≤ 6	≤ 9	≤ 12	> 12

Effect of hand-held call - Single Mic Noise Suppress

- Single mic noise suppress is adopted, including full band Wiener filter (for VaD) and subband Wiener filter (for speech enhancement).

Unisoc Confidential For longcheer

Without NS

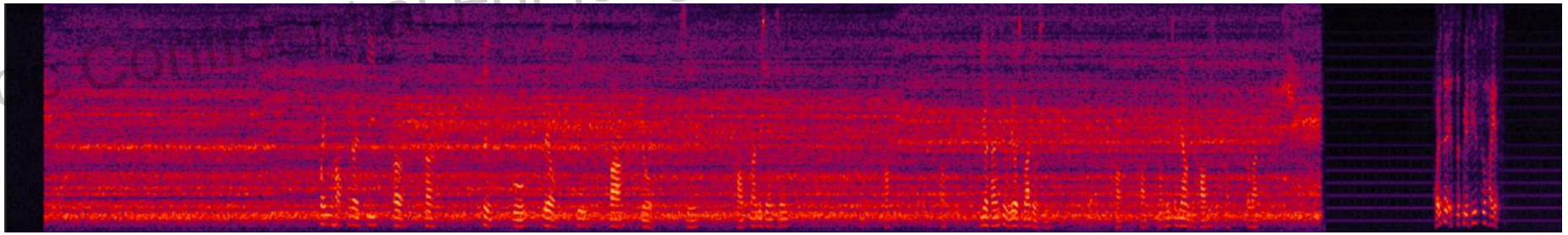

With NS

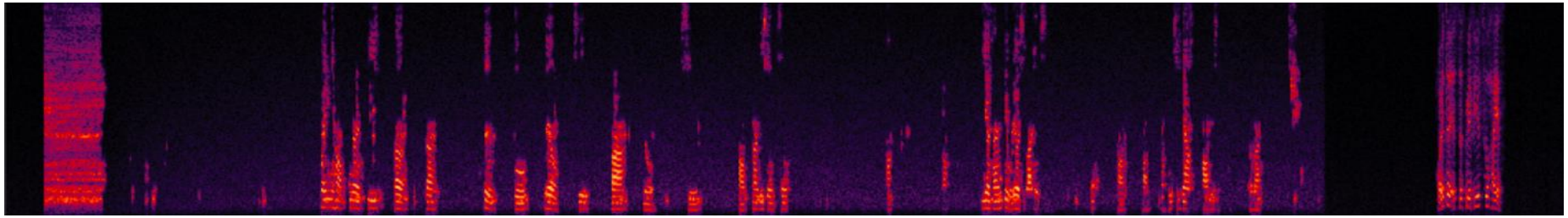

- Optimal objective value
  - Avg-SMOS: 4.07
  - Avg-NMOS: 3.43

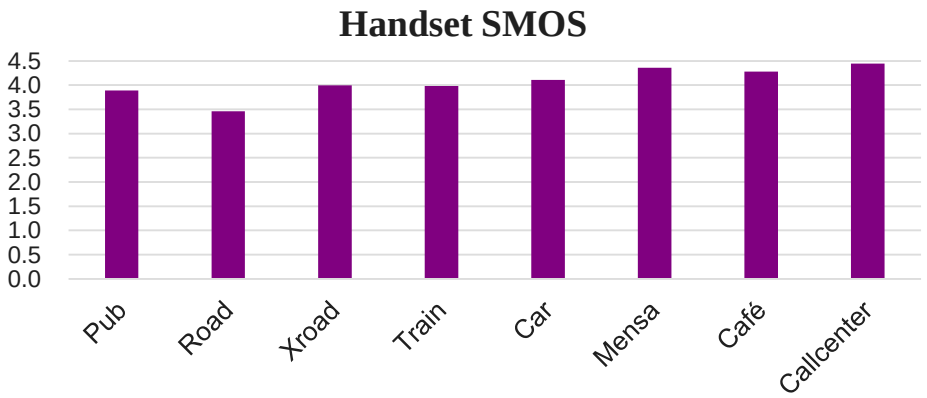

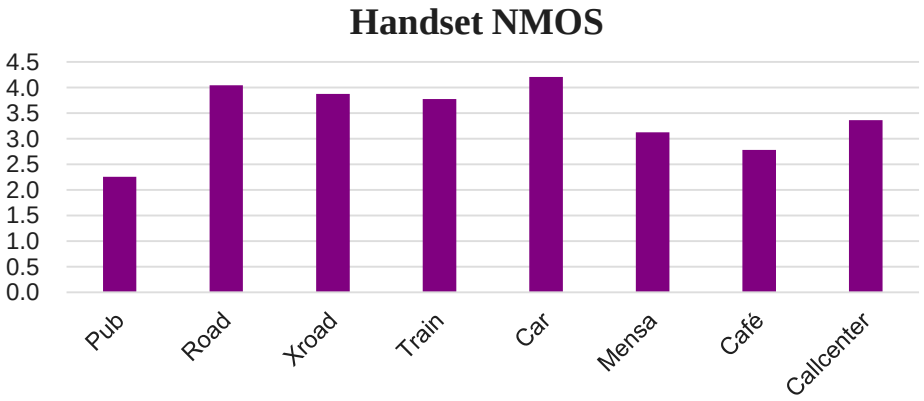

Effect of hand-held call -Dual Mics Noise Suppress

紫光展锐 UNISOC

- Using dual mic noise suppress, including crosstalk canceller and Wiener filter, the hand-held communication scene noise reduction effect is excellent.

Unisoc Confidential For longcheer

Without NS Mic1

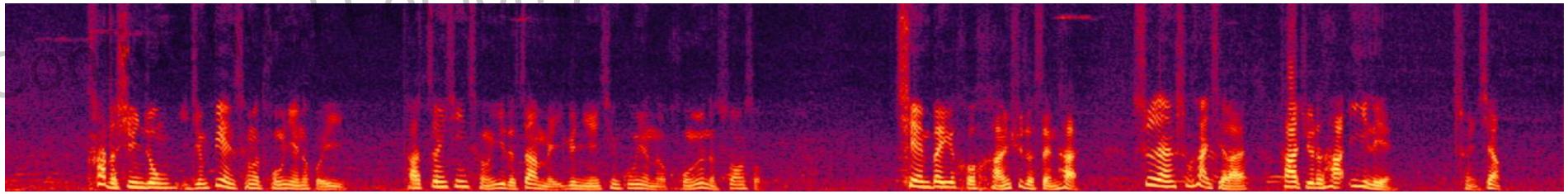

Without NS Mic2

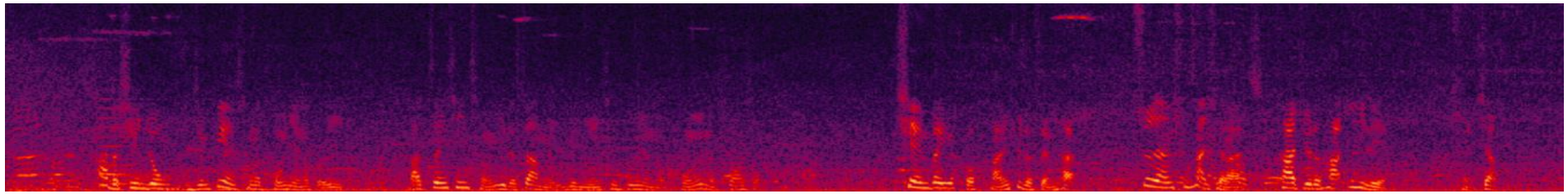

With NS

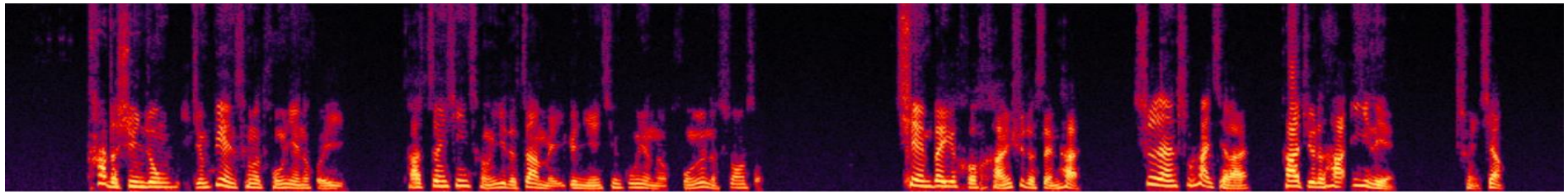

- Optimal objective value
  - Avg-SMOS: 4.07
  - Avg-NMOS: 4.27

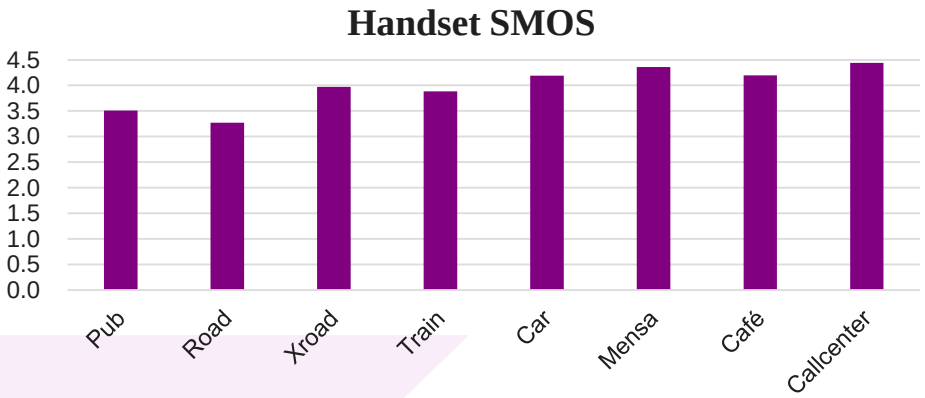

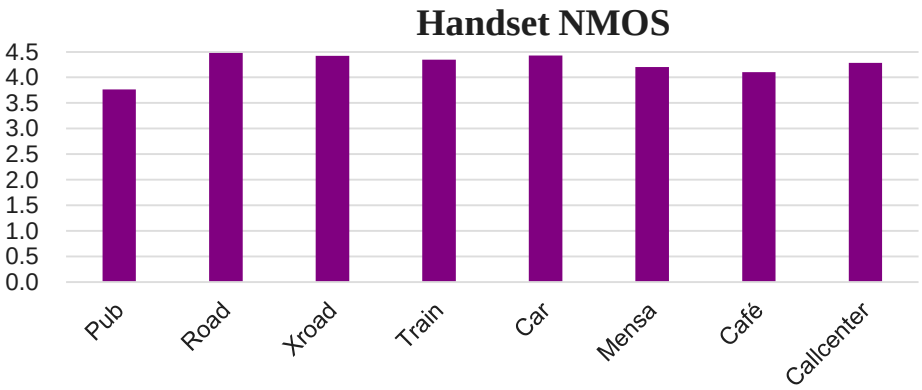

Effect of hands free call - echo double talk

- Echo suppression algorithm includes double talk detection（DTD） and nonlinear echo processing（NLP）.
- DTD performs well-separated detection of single talk and double talk. It enhances the double-talk performance along with complete echo cancellation and improves voice quality of audio communication.
- NLP can suppress the residual nonlinear echo effectively, with little impact on quality of near end speech during double talk.

Unisoc Confidential For Longcheer

Without NLP

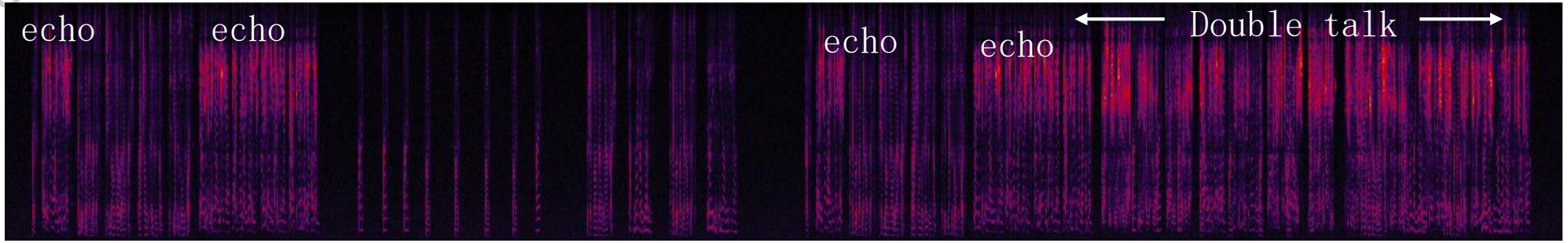

With NLP

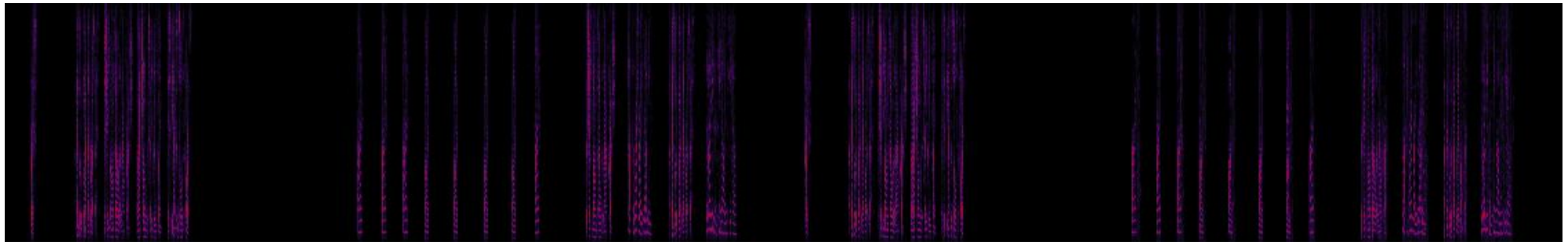

- Optimal objective value
  - Echo loss > 72dB
  - aHSdt < 6dB (Type2a)
  - DT Class A1 > 90%

Behavior	Type1	Type2a	Type2b	Type2c	Type3
aHSdt[dB]	≤ 3	≤ 6	≤ 9	≤ 12	> 12

Effect of hands free call – single mic noise suppress

- Optimization of unsteady noise suppression for single mic noise reduction
- The algorithm improves the noise spectrum estimation of the noisy speech in the single mic de-noising algorithm, which can effectively suppress the unsteady noise and quickly converge and attenuate the burst noise, thus improving the quality of voice calls.

Unisoc Confidential For longcheer

Without NS

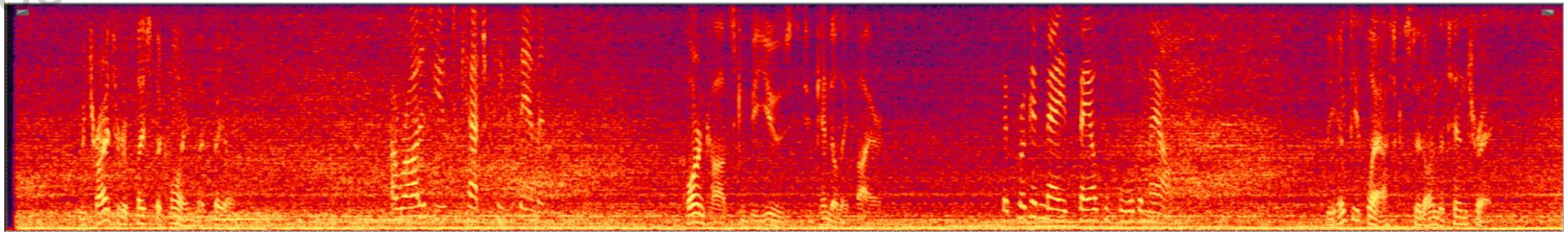

With NS

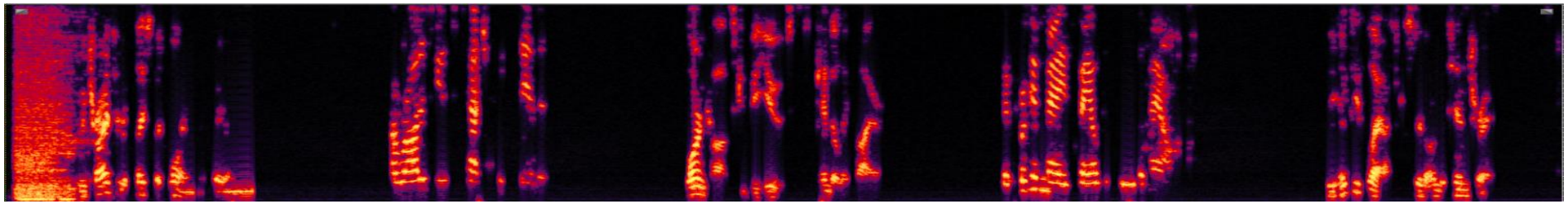

- Optimal objective value
  - Avg-SMOS: 3.19
  - Avg-NMOS: 3.66

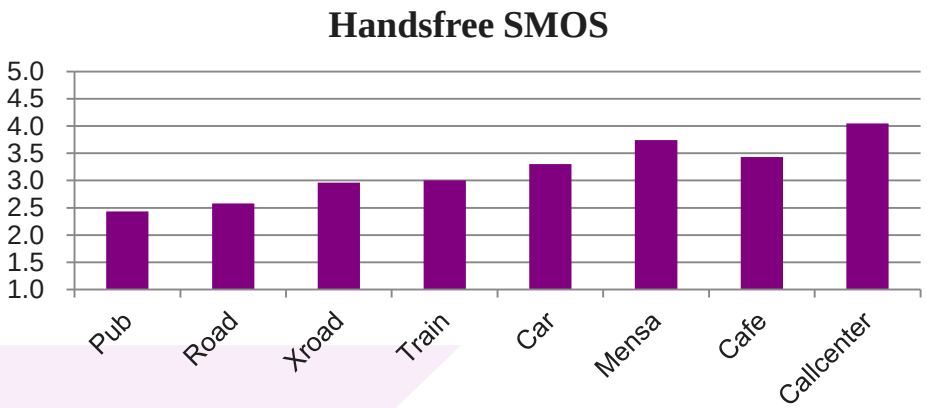

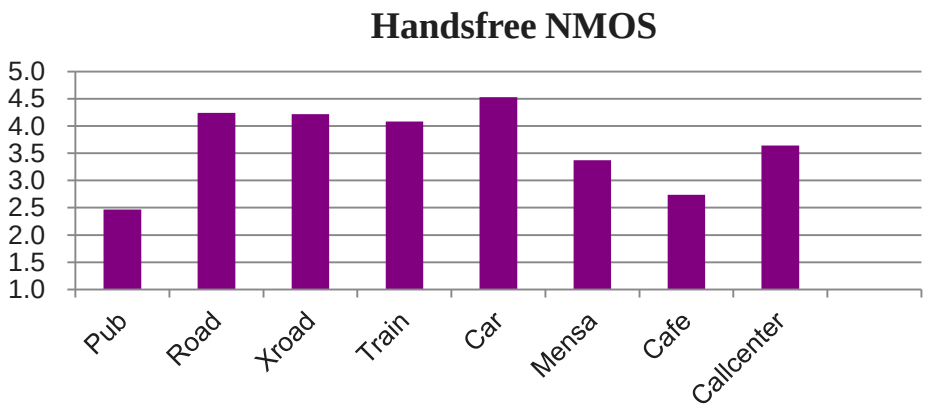

Effect of CVS hands free call - howling suppression

- Whistling suppression can achieve the shortest distance of 50 cm, and it is not easy to cause the deterioration of sound quality

Unisoc Confidential For longcheer

Without whistling suppression

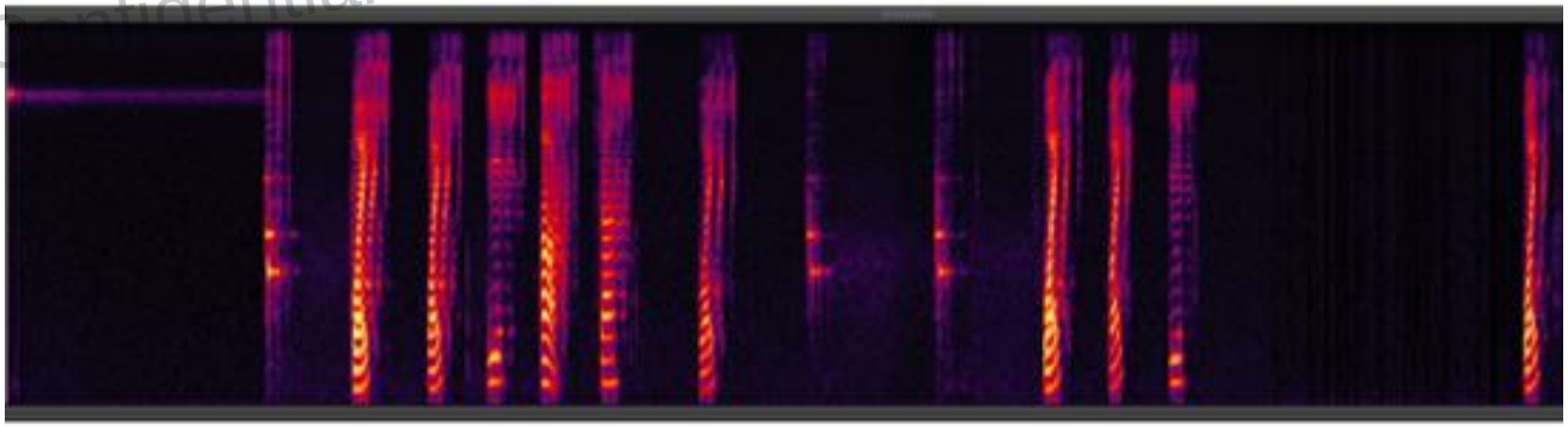

With whistling suppression

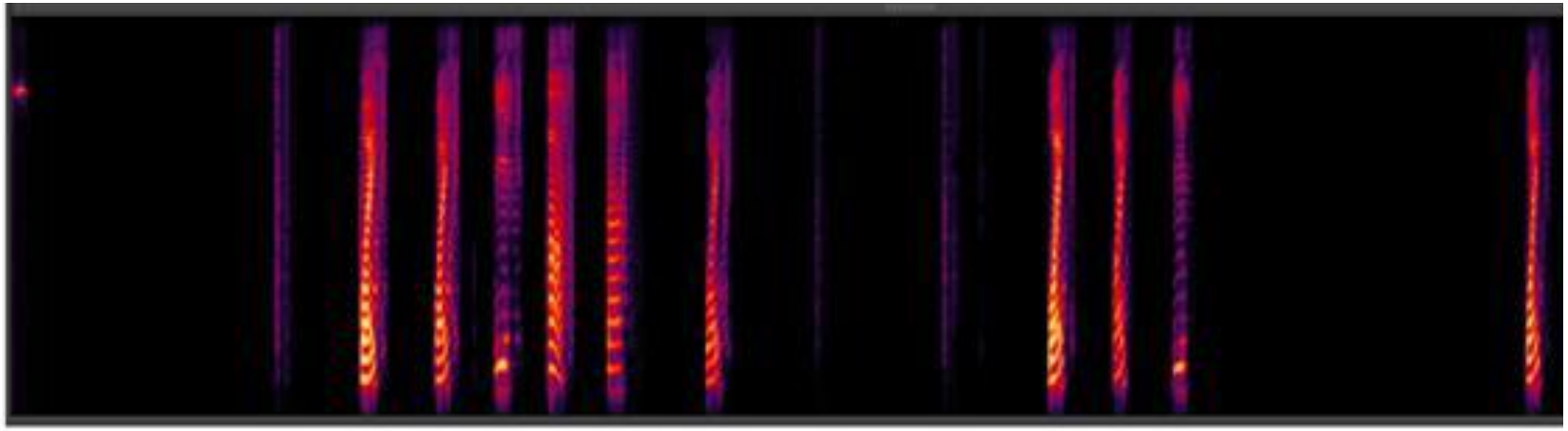

Unisoc Confidential For longcheer

Thanks!

紫光展锐
UNISOC